Transport Module ROBOT-20

Features:

- Able to both steer and drive the unit at the same time with the remote control
- Long lasting lithium powered battery
- Batteries are easily replaced, can be replaced even while under load
- Optional lift table and straight-line driving functions available upon request

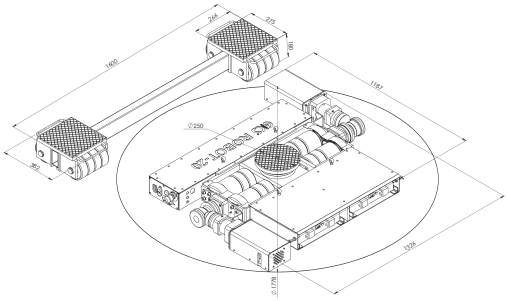

Technical data	L-ROBOT-20	F-ROBOT-20
Item number	3-14080	3-14081
Drive	DC Motor (24 V / 1000 W)	–
Battery Life	4-6 hours	–
Speed	10-20 ft/min; 3-6 m/min	–
Incline max. **	3 %	–
Loading height / number of special heavy-duty wheels	7.1" / 180 mm / 4 + 8 (4" / 2" / 105 / 53 mm wide)	7.1" / 180 mm / 18 (2 " / 53 mm wide)
Dimensions (L x W x H)	46.8 x 52.2 x 7.1" / 1187 x 1326 x 180 mm	15 x 63 x 7.1" / 382 x 1600 x 180 mm
Contact surface	Ø 9.8" / 250 mm	10.8 - 10.5" / 275 x 266 mm
Connecting rod adjustable	–	21 - 63" / 532 - 1600 mm
Total weight	567 lbs. / 255 kg	254 lbs. / 115 kg
Load Capacity	22,000 lbs. / 100 kN (10 t)	22,000 lbs. / 100 kN (10 t)
Total load capacity	44,000 lbs. / 200 kN (20 t)	

** Use a locking device to prevent inadvertent rolling at inclines